mm [inch]

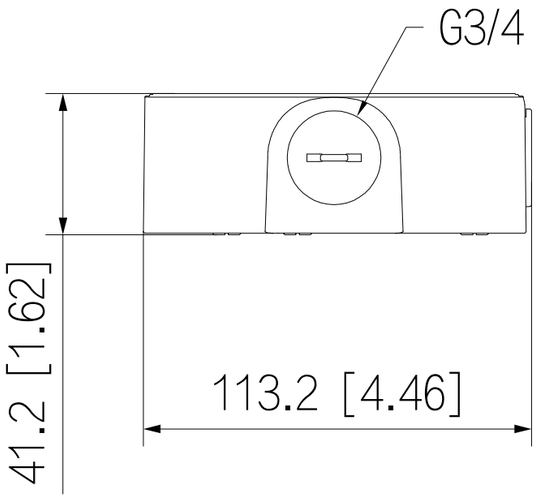
G3/4
41.2 [1.62]
113.2 [4.46]

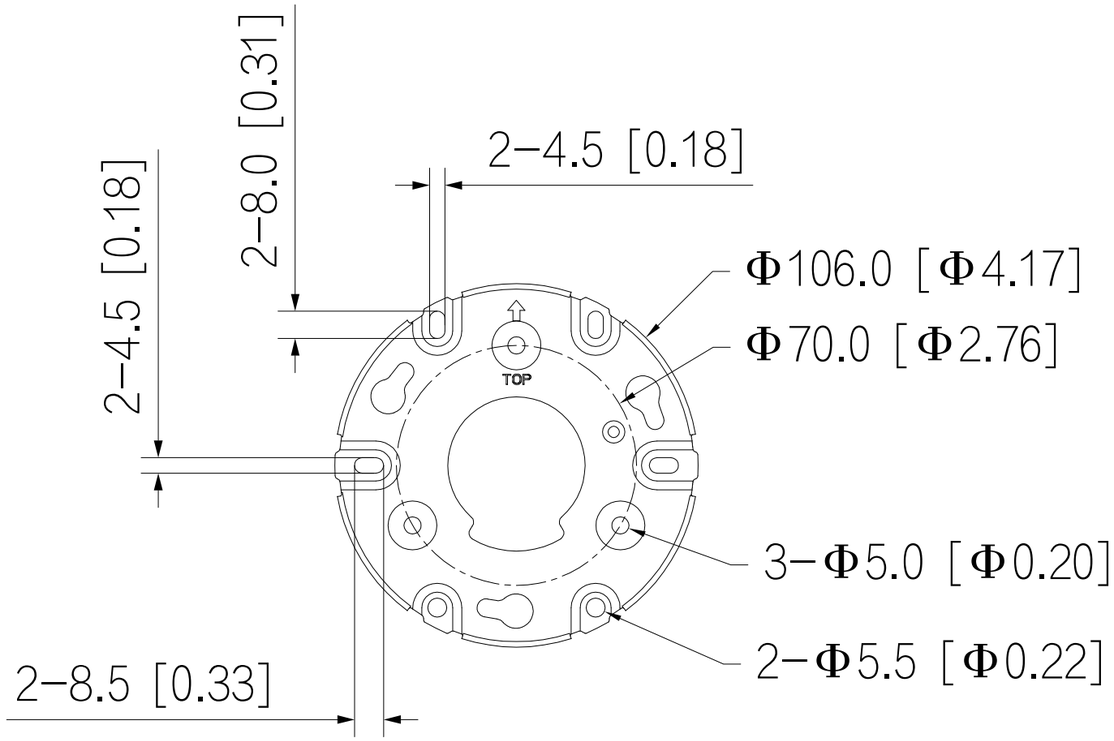
2−8.0 [0.31]
2−4.5 [0.18]
2−4.5 [0.18]
Φ106.0 [Φ4.17]
Φ70.0 [Φ2.76]
TOP
3−Φ5.0 [Φ0.20]
2−Φ5.5 [Φ0.22]
2−8.5 [0.33]

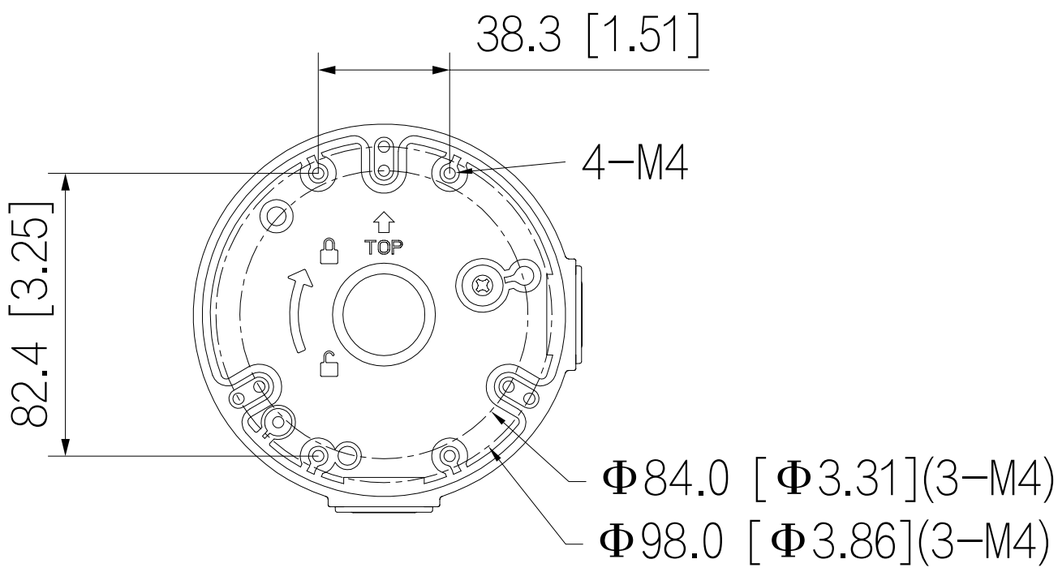
38.3 [1.51]
4−M4
82.4 [3.25]
TOP
Φ84.0 [Φ3.31](3−M4)
Φ98.0 [Φ3.86](3−M4)

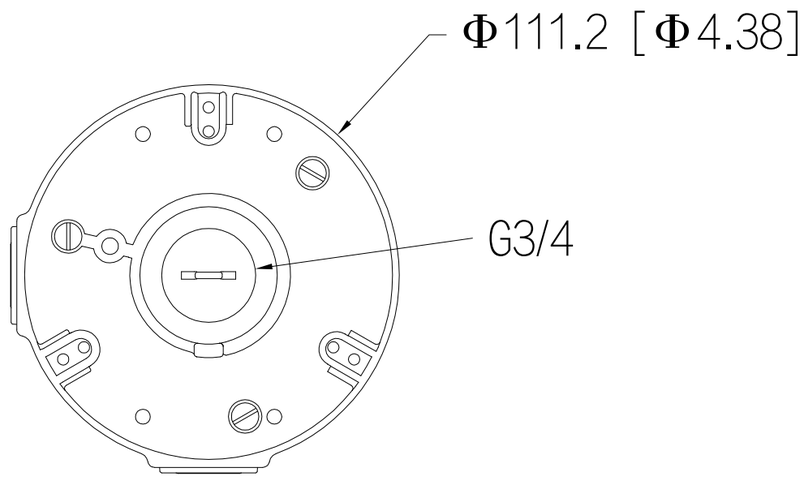
Φ111.2 [Φ4.38]
G3/4