mm [inch]

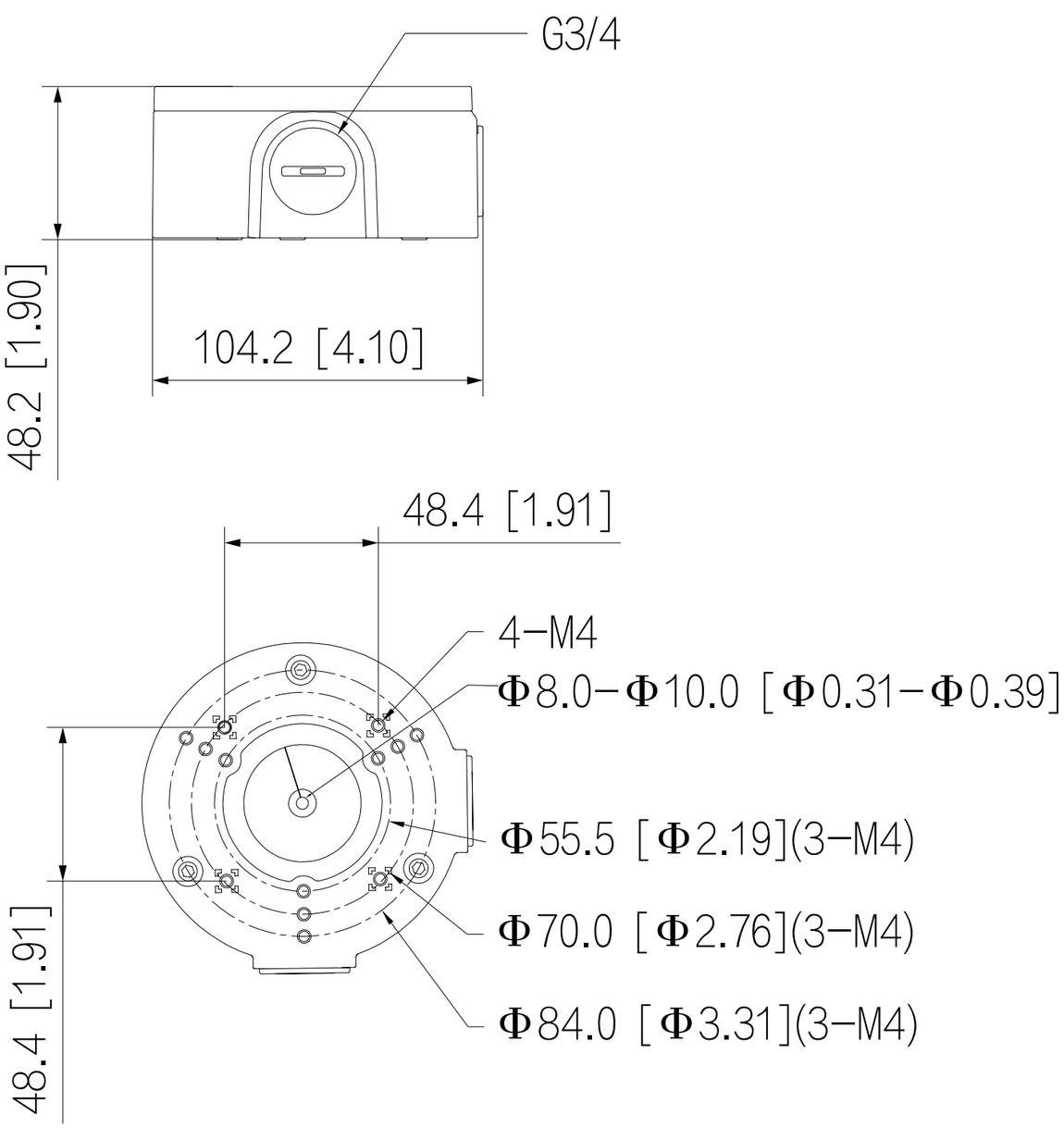
G3/4
48.2 [1.90]
104.2 [4.10]
48.4 [1.91]
4−M4
Φ8.0−Φ10.0 [Φ0.31−Φ0.39]
Φ55.5 [Φ2.19](3−M4)
Φ70.0 [Φ2.76](3−M4)
Φ84.0 [Φ3.31](3−M4)
48.4 [1.91]

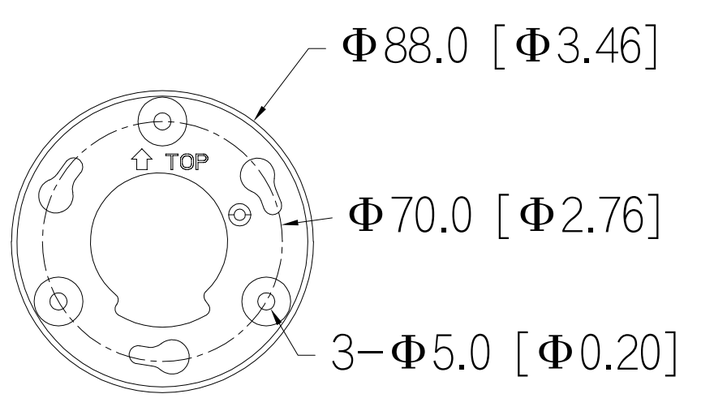
Φ88.0 [Φ3.46]
TOP
Φ70.0 [Φ2.76]
3−Φ5.0 [Φ0.20]

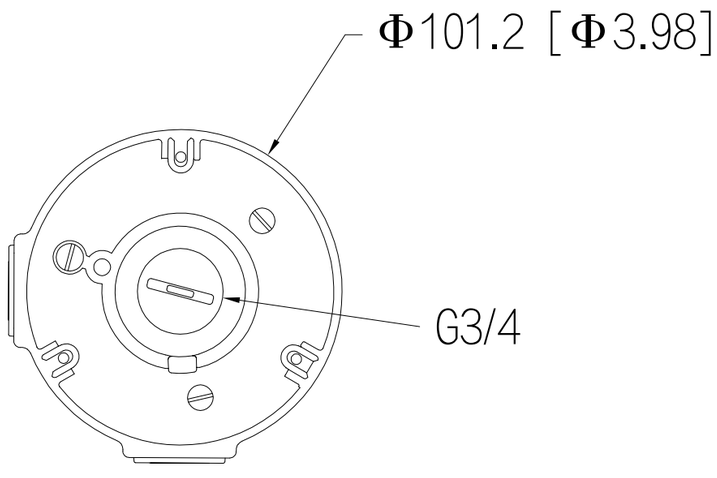
Φ101.2 [Φ3.98]
G3/4